Brake Lever

Over Center Locking Hand Control

Hand Control
Industrial

Cablecraft Motion Controls park brake levers offer superior performance, quality and service life to both the designer and user. The lever has two distinct positions, over-center and off, which are approximately 90° apart. There is no ratcheting to limit travel or secondary unlocking required for operation. A heat-treated 4130 load link provides an excellent combination of qualities for durability and reliability. An integral adjusting knob allows for setting the initial cable tension, travel, and to compensate for system wear. Side or flange mounted configurations are available for increased adaptability. The input lever and side plates have an epoxy finish or electro-static paint, and all other components are coated for corrosion resistance. A tamper-resistant knob to inhibit unauthorized adjustment, and a weather-resistant switch at the off position, are both available as options. The levers are supplied with hardware necessary to attach the cable end fittings to the load link. Technical descriptions show the various choices available to meet specific customer needs.

Description:

Brake Lever

Industrial Over Center Locking Hand Control

Applications:

- Mobile equipment
- Industrial equipment

Features:

- Loads: 1000lb
- Travel: 2-7/16″ maximum
- Side and flange mounting
- Epoxy finish or electrostatic paint on lever and side plates
- Corrosion-resistant components
- Attachment hardware included
- Tamper-resistant knob (option)
- Weather-resistant switch (option)

Other Related Products:

- All other hand levers

Cablecraft®
Cablecraft Motion Controls

Linking Motion & Control... The Cablecraft Solution

Brake Lever

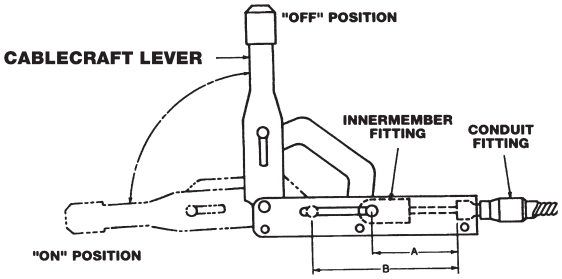

Cablecraft® Lever	Innermember Fitting		Conduit Fitting		Dimension		
	3000 lb	1500 lb	3000 lb	1500 lb	A	B min.	B max.
165-508-008	CS550-2	CS550	073	-	3.23	3.87	5.47
			072	062	3.36	4.00	5.60
165-508-011	CS550-2	CS550	072	062	2.71	3.35	4.95
165-508-023	154-047-002	157-047-000	072	062	2.38	3.02	4.62
165-508-028	CS550-2	CS550	075	065	3.14	3.78	5.35
165-508-010	CS550-2	CS550	073	-	1.70	2.34	3.94
			072	062	1.83	2.47	4.07
165-508-009	CS550-2	CS550	-	-	-	-	-
165-508-078	CS550-2	CS550	073	-	1.70	2.34	3.94
			072	062	1.83	2.47	4.07
165-508-013	157-047-002	157-047-000	073	-	2.27	2.91	4.51
			072	062	2.40	3.04	4.69

- Dimension A is with the lever in full “OFF” position. Use dimension A in calculating cable length.
- Dimension B minimum is with the lever in full “ON” position and adjusted for minimum (CCW) travel. Use dimension B minimum during installation and initial adjustment. Turn knob (CW) to add travel and increase brake pressure setting.
- Dimension B maximum is with the lever in full “ON” position and adjusted for maximum (CW) travel.

Side Mount 165-508-008

2.5 inches (64mm) wide side plates; one cable, with three alternate sets of cable clamp holes. For cowl, instrument panel, seat riser or frame installation.

Kit B815 — supplied with the following hardware:

Clevis pin
Cotter pin
Washer
Mounting spacers (2)
Cable clamp
Clamp base
Clamp spacers (2)

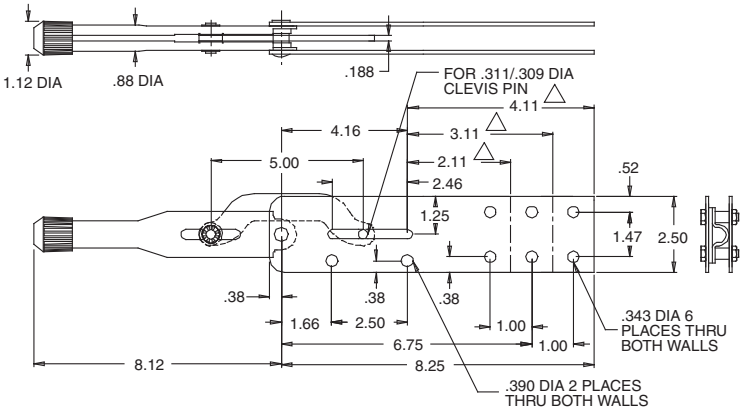

Side Mount 165-508-009

2.5 inches (64mm) wide side plates; one cable. For cowl, instrument panel, seat riser or frame installation. No cable support.

Kit B816 — supplied with the following hardware:

Clevis pin
Cotter pin
Washer
Mounting spacers (2)

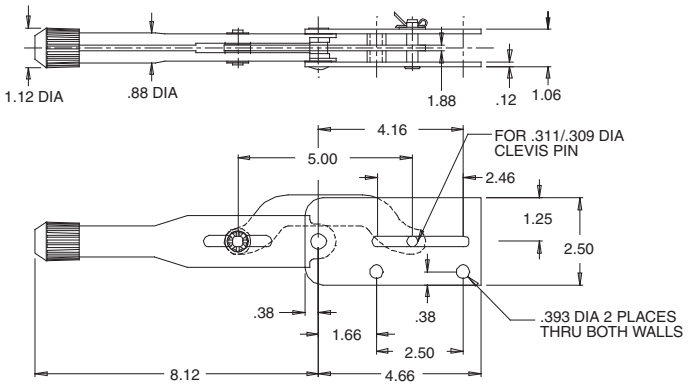

All line art dimensions are represented in inches

Flange Mount 165-508-010

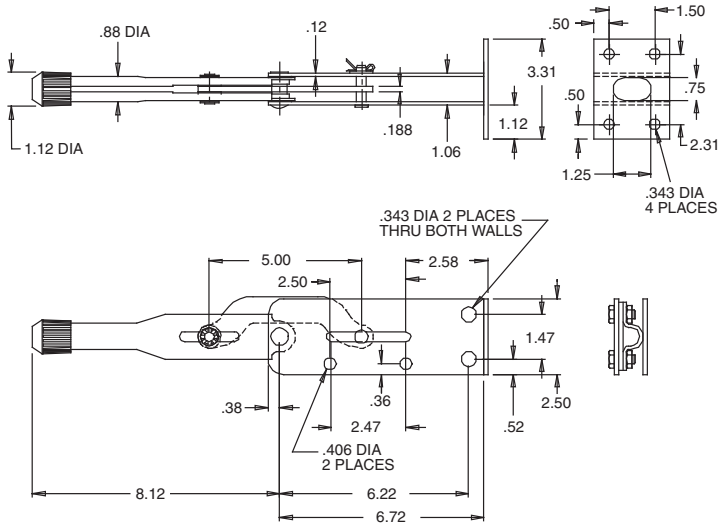

2.5 inches (64mm) wide side plates; one cable. For bulkhead floor or island (doghouse) installation. The rigid frame maintains alignment of clevis pin guide slots for improved life of both the pin and side plates.

Kit B817 — supplied with the following hardware:

Clevis pin
Cotter pin
Washer
Cable clamp
Clamp base
5/16-24 Bolts (2) nuts (2)

Side Mount 165-508-011

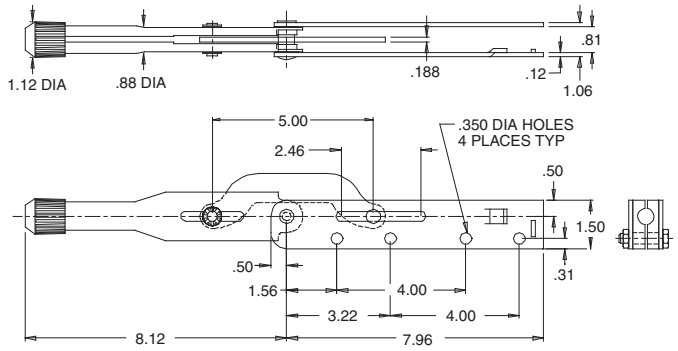

1.5 inches (38mm) wide side plates; one cable. For cowl, instrument panel, seat riser or frame installation.

Kit B834 — supplied with the following hardware:

Clevis pin
Cotter pin
Washer
Mounting spacers (2)
Cable clamp

Side Mount 165-508-013

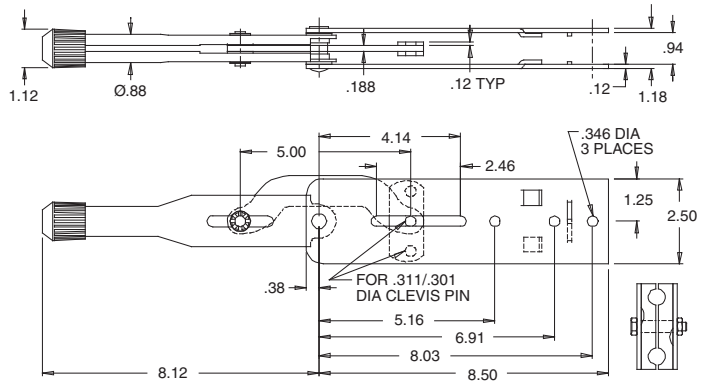

2.5 inches (64mm) wide side plates; two cables. For cowl, instrument panel, seat riser or frame installation. NOTE: When considering load requirements, the load on the lever assembly will be the sum of the load in each cable.

Kit B835 — supplied with the following hardware:

Clevis pins (2)
Cotter pins (2)
Washers (2)
Mounting spacers (2)
Cable clamps

All line art dimensions are represented in inches

Brake Lever

Material

- Coated Carbon Steel
- Non-corrosive Bushings
- Plastic Knob

Flange Mount Rigid 165-508-023

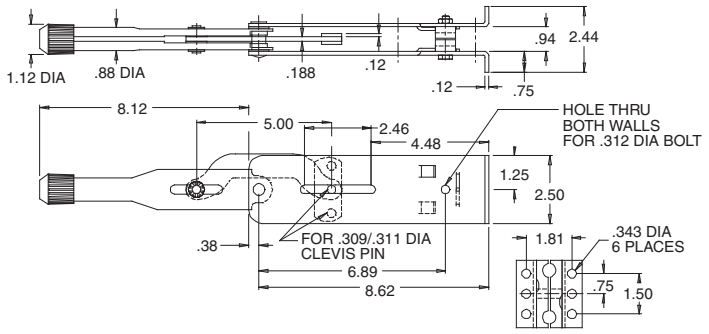

1.5 inches (38mm) wide side plates; one cable.
For cowl, instrument panel, seat riser or frame installation.

Kit B837 — supplied with the following hardware:

Clevis pin
Cotter pin
Washer
Mounting spacers (2)
Cable clamp
Clamp spacers (2)

Side Mount 165-508-028

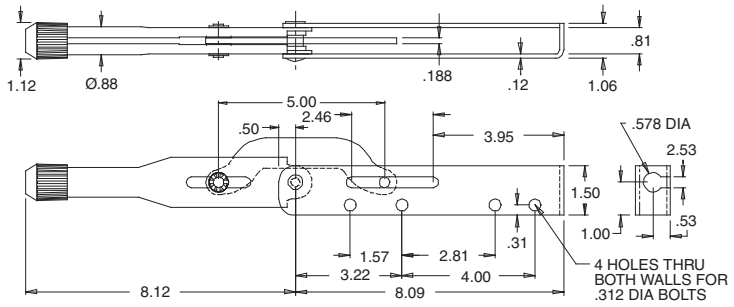

1.5 inches (38mm) wide side plates; one cable.
For cowl, instrument panel, seat riser or frame installation.

Kit B837 — supplied with the following hardware:

Clevis pin
Cotter pin
Washer
Mounting spacers (2)
Cable clamp
Clamp spacers (2)

Flange Mount 165-508-078

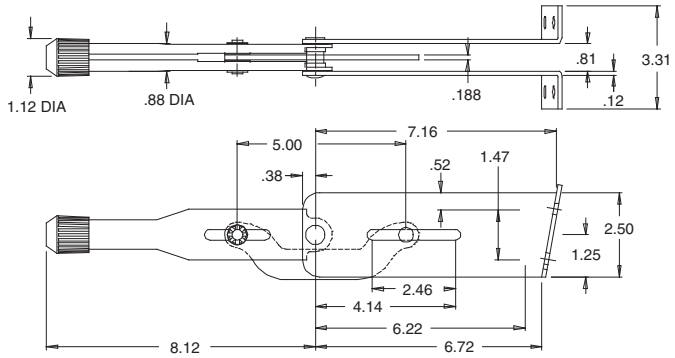

All line art dimensions are represented in inches

2.5 inches (64mm) wide side plates; two cables. For bulkhead, floor or island (doghouse) installation. NOTE: When considering load requirements, the load on the lever assembly will be the sum of the load in each cable. Wing flange mounting.

Kit B835 — supplied with the following hardware:

Clevis pins (2)
Cotter pins (2)
Washers (2)
Mounting spacers (2)
Cable clamps

WARNING!

Since the manufacturer is unable to determine all applications in which a part may be placed, it is the user's responsibility to determine the suitability of the part for its intended use. This is especially true where safety is a factor. Incorrect application or installation may result in property damage, bodily injury, or death. For technical assistance, call 260-749-5105.

Linking Motion & Control...
The Cablecraft Solution

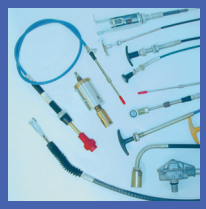

Cablecraft Motion Controls

2110 Summit Street
New Haven, Indiana USA 46774
Tel 260 749-5105 Fax 260 749-5677

4401 South Orchard Street
Tacoma, Washington 98411 USA
Tel 253 475-1080 Fax 253 474-1623

Diplocks Way-South Road
Hailsham, East Sussex BN27 3JF, England
Tel 44 1323 841510 Fax 44 1323 845848

www.cablecraft.com

© 2010 Cablecraft Motion Controls
Printed in USA